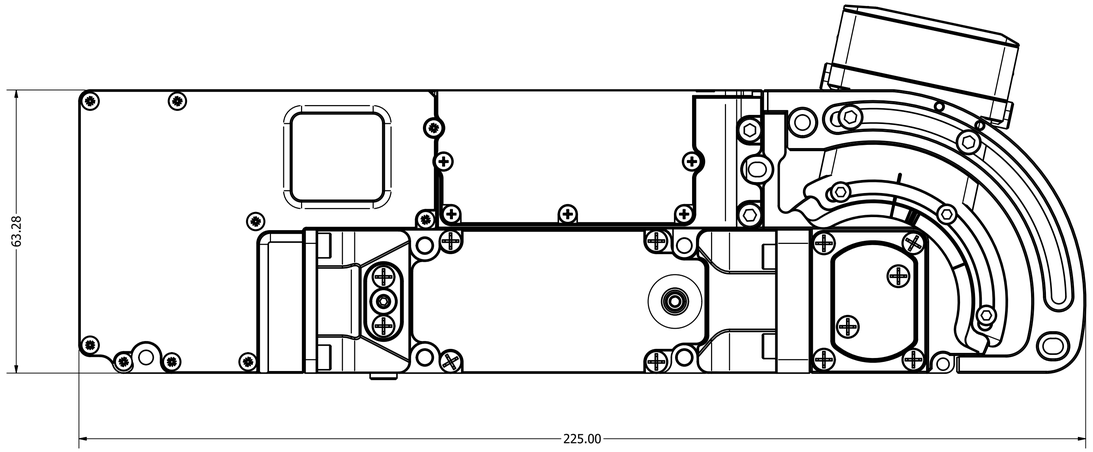

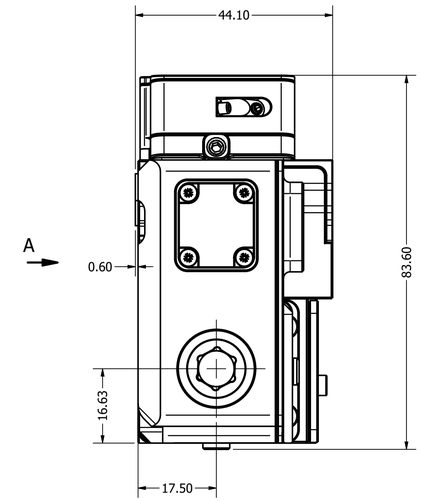
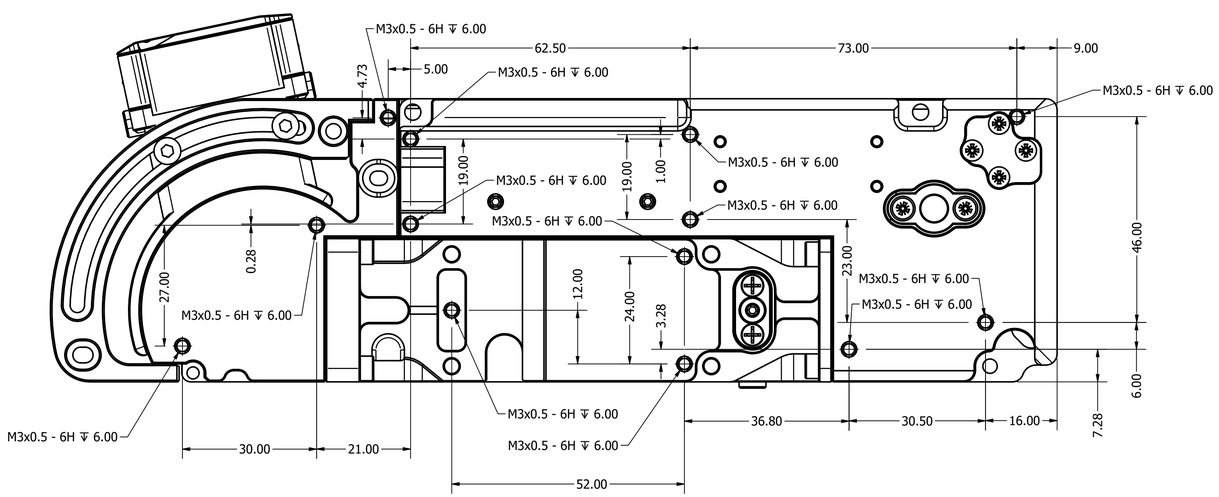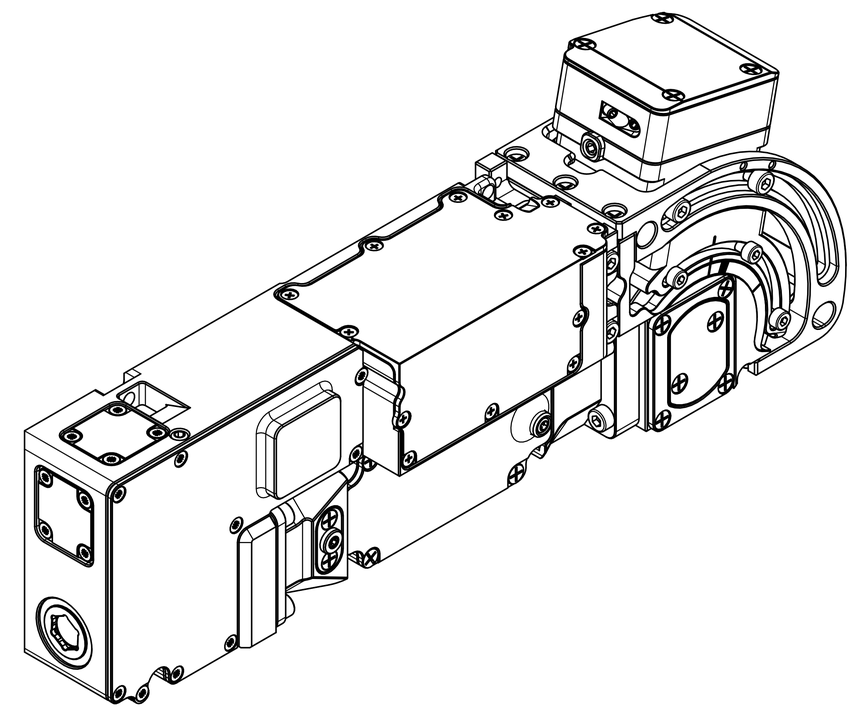
View A-A
Scale 1.5 : 1